04/2013

Mod: F16E/D-N

Production code: FE-30

Diamond

catering equipment

FE-30

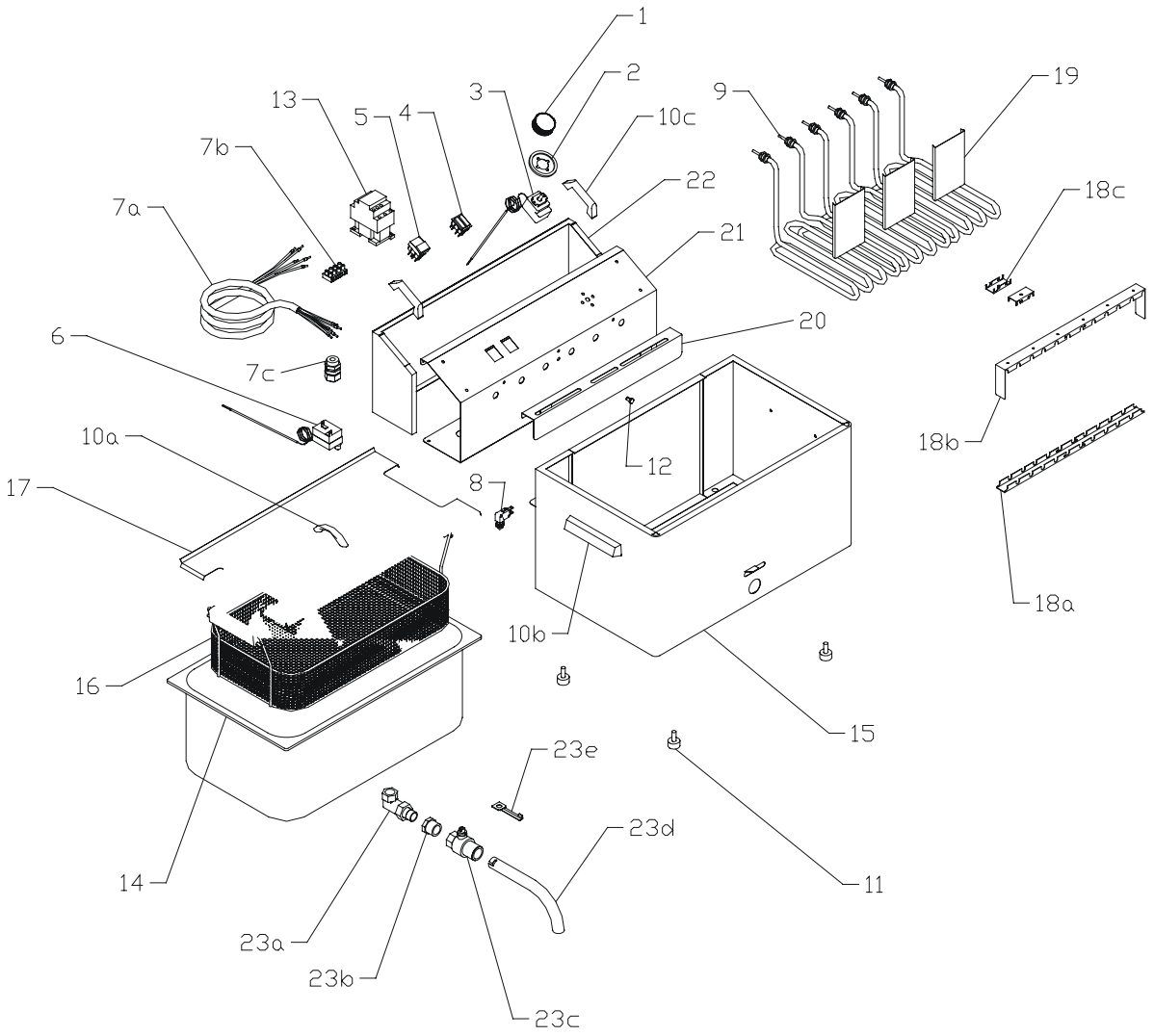
1
2
3
4
5
13
7b
7a
10c
22
21
20
9
19
18c
18b
18a
6
7c
10a
17
8
12
10b
16
15
14
23e
23d
11
23a
23b
23c