10/2013

Mod: CGE611-NP

Production code: 503.016.201

Diamond
catering equipment

From: 02.09.2013
To: 24.02.2015

Mod./Type: **FORNO ELETTRICO 6T PORTA A BANDIERA**
ELECTRIC OVEN 6T SWING DOOR

cod./num.	2531596.00
data/date:	04/10/2013

CGE611 NP
CPE664 NP

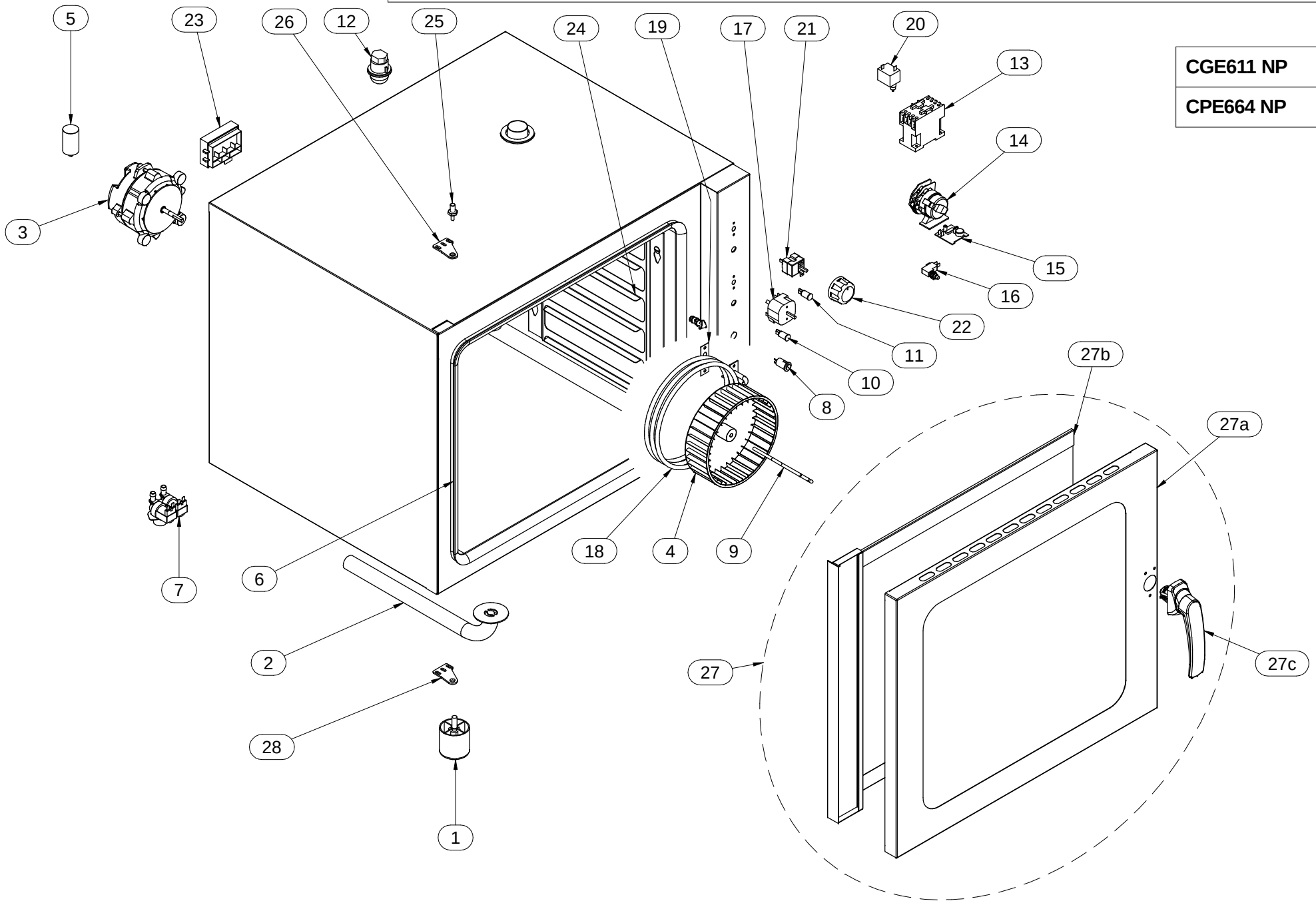

Mod.:	FORNI ELETTRICI VENTILATI ELECTRIC FAN OVENS FROM: 02.09.2013 - TO: 24.02.2015			cod. / num. 2531597.00 data / date 04/10/2013 rif. / ref. 2531596.00		CGE611 NP	CPE664 NP	NOTE
POS.	DESCRIZIONE	DESCRIPTION	DENOMINATION	BENENNUNG	COD.	Q. ty		
1	PIEDINO	FOOT	PIED	STELLFUSS	551.012.00	4	4	
2	SCARICO	DRAIN	VIDANGE	ABLAUF	511.101.00	1	-	
3	MOTORE	MOTOR	MOTEUR	MOTOR	564.039.14	2	2	
4	VENTOLA	FAN	VENTILATEUR	LÜFTERRAD	544.019.00	2	2	
5	CONDENSATORE	CONDENSER	CONDENSEUR	KONDENSATOR	564.040.14	2	2	
6	GUARNIZIONE	WASHER	GUARNITURE	DICHTUNGSRING	553.010.00	1	1	
7	ELETTROVALVOLA	SOLENOID VALVE	ELECTROVANNE	ELEKTROVENTIL	256.054.00	1	1	
8	PULSANTE INIEZIONE ACQUA	WATER INJECTION PUSH BUTTON	POUSSOIR INJECTION EAU	WASSERSPRITZKNOPF	561.039.00	1	1	
9	EROGATORE	NOZZLE	INJECTEUR	SPRÜHDOSE	531.040.00	2	2	
10	SPIA VERDE	GREEN INDICATOR LIGHT	LAMPE TEMOIN VERTE	GRUENE KONTROLLAMPE	963.012.00	1	1	
11	SPIA ARANCIO	ORANGE INDICATOR LIGHT	LAMPE TEMOIN ORANGE	ORANGE KONTROLLAMPE	963.013.00	1	1	
12	LAMPADA	LAMP	LAMPE	LAMPE	563.004.00	1	1	
13	CONTATTORE	CONTACTOR	CONTACTEUR	FERNSCHALTER	961.002.00	2	2	
14	TIMER CICLO	CYCLE TIMER	MINUTERIE CYCLE	ZYKLUS-ZEITSCHALTER	561.035.00	1	1	
15	BUZZER	BUZZER	SONNERIE	KLINGELTON	256.052.00	1	1	
16	MICRO PORTA	DOOR MICROSWITCH	MICROINTERRUPTEUR PORTE	TUERKONTAKT SCHALTER	961.021.00	1	1	
17	TIMER	TIMER	TIMER	ZEITSCHALTUHR	561.041.00	1	1	
18	RESISTENZA	HEATING ELEMENT	RESISTANCE	HEINZELEMENT	565.008.00	2	2	
19	GUARNIZIONE RESISTENZA	HEATING ELEMENT GASKET	JOINT DE LA RÉSISTENCE	WIDERSTAND-DICHTUNG	553.008.00	2	2	
20	TERMOSTATO SICUREZZA	SAFETY THERMOSTAT	THERMOSTAT DE SECURITE	TEMPERATURBEGRENZER	561.036.00	1	1	
21	TERMOSTATO	THERMOSTAT	THERMOSTAT	THERMOSTAT	561.038.00	1	1	
22	MANOPOLA	KNOB	BOUTON	DREHKNOPF	551.002.00	2	2	
23	MORSETTIERA	TERMINAL BOARD	BORNES	KLEMMENBRETT	663.040.00	1	1	
24	COPPIA REGGIGRIGLIA	TRAY RACK KIT	COUPLE DE PORTE-PLAQUES	PAAR EINHÄNGEGESTELL	505.532.40	1		
					503.531.40		1	
25	PERNO CERNIERA	JOINT STUD	GOUJON DE LA CHARNIÈRE	SCHARNIERBOLZEN	541.043.00	1	1	
26	CERNIERA	JOINT	CHARNIERE	SCHARNIER	256.056.00	1	1	
27	PORTA	DOOR	PORTE	TÜR	510.061.15	1	1	
27a	VETRO ESTERNO	OUTER GLASS	VERRE EXTÉRIEUR	ÄUßERES GLAS	256.435.00	1	1	
27b	VETRO INTERNO	INNER GLASS	VERRE INTÉRIEUR	INNERES GLAS	510.087.00	1	1	
27c	MANIGLIA	HANDLE	POIGNÉE	HANDGRIFF	584.002.00	1	1	
28	CERNIERA	JOINT	CHARNIERE	SCHARNIER	256.095.00	1	1	